Technical Bulletin
No: 107 – Denon 950FA CD Player Interface

Model: RS-6/12/18/24 **No:** 107

Subject: Using Denon 950 FA CD Player with RS Series Console **Date:** 03/03/95

Procedure: For full remote control interface, a modified Radio Systems cart machine interface card is required. Contact the factory for availability

Strap jumper J8 on the cart interface card for trailing edge operation (this turns off the console channel).

Wire the modified card to the Denon remote connector as follows:

Function	Denon Remote Pin#	Cart Interface Terminal#
Standby Lamp	8	3
Standby Lamp	6	4
Play Lamp	8	1
Play Lamp	25	2
Play Switch	11	10
Play Switch	16	10
+ Voltage	33	7
End of Message	1	8

Note: Also connect Denon Pin #20 (EOM) to Denon Pin #29 (ground).

601 Heron Drive
Logan Township, NJ 08085
Phone: 856-467-8000 • Fax: 856-467-3044
http://www.radiosystems.com

Technical Bulletin
No: 107 – Denon 950FA CD Player Interface

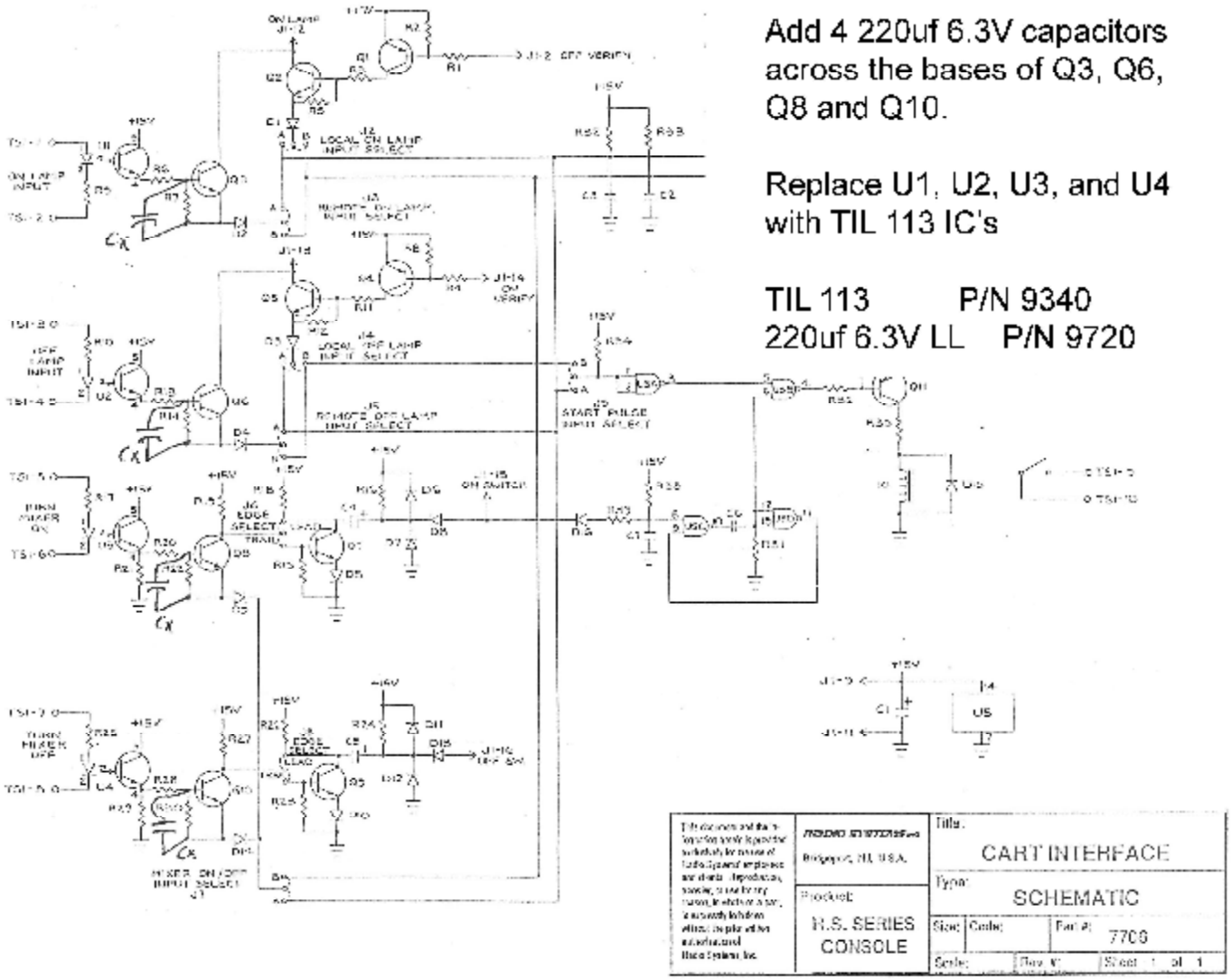

601 Heron Drive
Logan Township, NJ 08085
Phone: 856-467-8000 • Fax: 856-467-3044
http://www.radiosystems.com